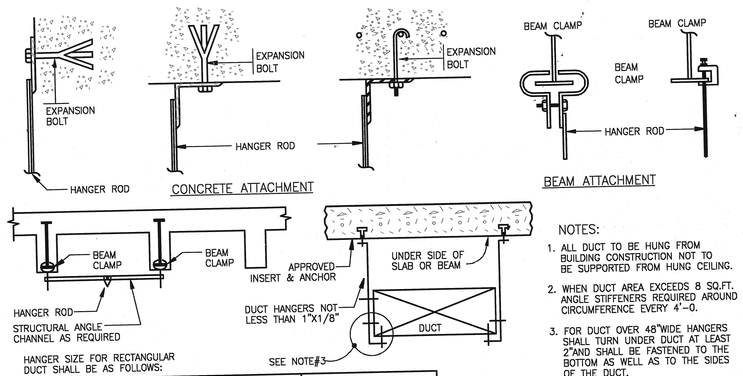

HANGER SIZE FOR RECTANGULAR DUCT SHALL BE AS FOLLOWS:

LONGEST DIMENSION OF DUCT	ROUND HANGERS	MAX SPACING SEE NOTE #4	STRAP HANGERS	TRAPEZE SHELF ANGLES
UP TO 18"	8"GA.WIRE	8'-0"	1"X1/8"	1"X1"X 1/8"
19" TO 30"	1/4" ROD	8'-0"	1"X1/8"	1"X1"X 1/8"
31" TO 42"	1/4" ROD	8'-0"	1"X1/8"GA.	1 1/2"X 1 1/2"X 1/8"
43" TO 60"	3/8" ROD	4'-0"	——	1 1/2"X 1 1/2"X 1/8"
61" TO 84"	3/8" ROD	4'-0"	——	2"X2"X1/8"
85" TO 96"	3/8" ROD	4'-0"	——	2"X2"X 3/16"
OVER 97"	3/8" ROD	4'-0"	——	2"X2"X 1/4"

NOTES:

1. ALL DUCT TO BE HUNG FROM BUILDING CONSTRUCTION NOT TO BE SUPPORTED FROM HUNG CEILING.
2. WHEN DUCT AREA EXCEEDS 8 SQ.FT. ANGLE STIFFENERS REQUIRED AROUND CIRCUMFERENCE EVERY 4'-0.
3. FOR DUCT OVER 48"WIDE HANGERS SHALL TURN UNDER DUCT AT LEAST 2"AND SHALL BE FASTENED TO THE BOTTOM AS WELL AS TO THE SIDES OF THE DUCT.
4. FOR DUCTS WITH A CROSS SECTIONAL AREA OF 4 SQ.FT. OR LESS. HANGERS SHALL BE NO MORE THAN 8FT. APART. FOR DUCTS WITH A CROSS SECTIONAL AREA OF MORE THAN 4 SQ.FT. BUT NOT OVER 8 SQ.FT. HANGERS SHALL BE NOT MORE THAN 6 FT. A PART. AND FOR DUCTS WITH A CROSS SECTIONAL AREA OF MORE THAN 8 SQ.FT. HANGERS SHALL BE NOT MORE THAN 4 FT. A PART. THE DISTANCES BETWEEN SHALL BE MEASURED LINEARLY ALONG THE DUCT.

DUCT SUPPORT DETAIL

NOT TO SCALE

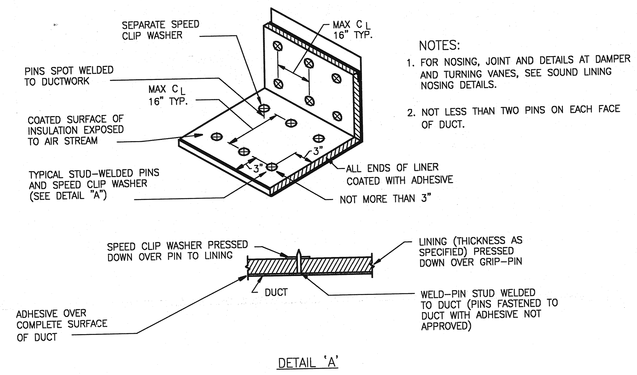

DETAIL 'A'

NOTES:

1. FOR NOSING, JOINT AND DETAILS AT DAMPER AND TURNING VANES, SEE SOUND LINING NOSING DETAILS.
2. NOT LESS THAN TWO PINS ON EACH FACE OF DUCT.

SOUND LINING INSTALLATION DETAIL

NOT TO SCALE

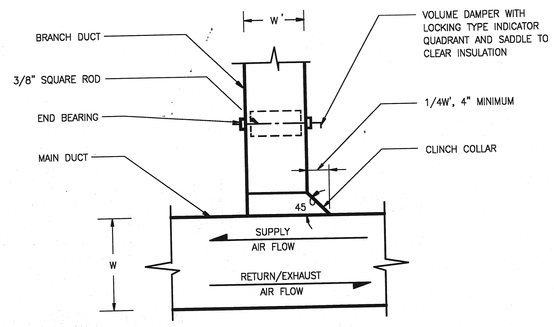

NOTES

1. FURNISH THIS TYPE CONNECTION WHEN SINGLE LINE DUCTWORK IS INDICATED AS THIS FOR LOW PRESSURE BRANCHES WITH LESS THAN 700 CFM AND MEDIUM PRESSURE BRANCHES WITH LESS THAN 1000 CFM.
2. NOT TO BE USED AS SUBSTITUTE FOR ELBOW

RECTANGULAR DUCT ANGULAR TAP WITH VOLUME DAMPER

NOT TO SCALE

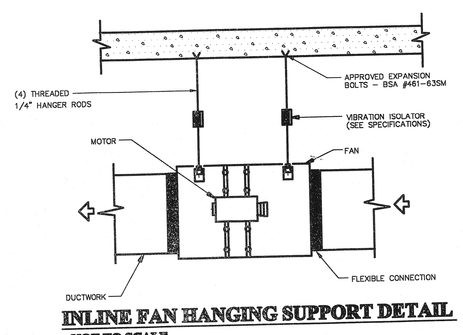

INLINE FAN HANGING SUPPORT DETAIL

NOT TO SCALE

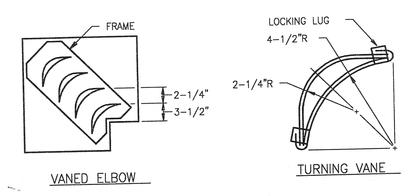

VANED ELBOW

TURNING VANE

NOTES:

1. LOCKING LUGS INTEGRAL WITH VANE
2. MAXIMUM UNSUPPORTED VANE LENGTH 48"
3. FRAMES - BOLTED OR RIVETED TO ELBOW
4. VANES AND FRAMES - SAME GAUGE AS ELBOW

DOUBLE THICKNESS TURNING VANES FOR SQUARE ELBOW

NOT TO SCALE

APS HEALTH CARE

building property manager:
44 South Broadway Property LLC
con: Bill Bassett
T: 914.682.8300

tenant:
APS Healthcare
con: Shelly
6403 Colesville Road, #1800
Silver Spring, MD 20910
T: 301.553.5633X3097
F: 239.353.5677

project manager:
Xxx
con: Xxx
xxx
xxx
xxx, xx xxxxx
T: xxx.xxx.xxxx
F: xxx.xxx.xxxx
xxx@xxx.com

architect:
Alliance Architecture
con: Tim Kearney
63 West Street
Annapolis, MD 21401
T: 410.626.8595
F: 410.626.8596
xxx@alliancearchitecture.com

project address: 44 SOUTH BROADWAY WHITE PLAINS, NY 10601

mechanical / electrical / plumbing:
C&F CONSULTING ENGINEERS, PC
488 NORTH BROADWAY
WHITE PLAINS, N.Y. 10603
(914) 423-3933 TEL.
(914) 423-3934 FAX

general contractor:

ALLIANCE ARCHITECTURE
63 WEST STREET
ANNAPOLIS, MARYLAND 21401
T: 410.626.8595
F: 410.626.8596

revisions:

ISSUE FOR BID, PERMIT & LL REVIEW	01.18.11
ISSUE FOR FINAL REVIEW	01.14.11
ISSUE FOR ENGINEERING	12.17.10

date:
RECEIVED
JAN 20 2011
ABM AIR CONDITIONING AND HEATING, INC.

sheet title:
HVAC DETAILS (SHEET 2 OF 2)

date:	01.18.2011
scale:	N.T.S.
drawn by:	AP
checked by:	DF

sheet number: H-5